kentintrol

SUBSEA CHOKES AND CONTROL VALVES

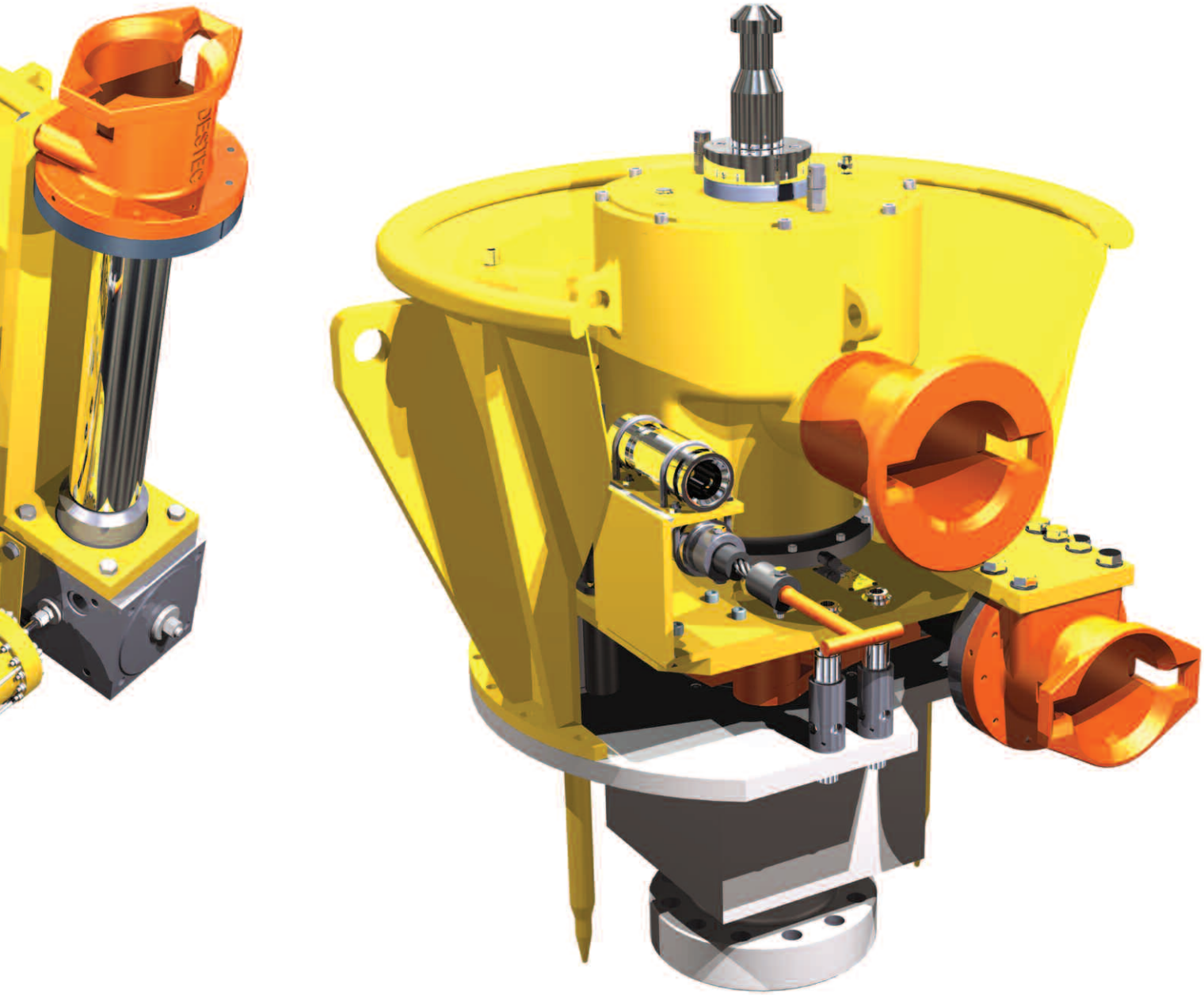

KOSO

INTRODUCTION TO SUBSEA

KOSO KENT INTROL PROVIDES SUBSEA CHOKE AND CONTROL VALVE PACKAGES TO CUSTOMERS AROUND THE WORLD. OUR SUBSEA SERVICE INCLUDES PROJECT ENGINEERING, MANAGEMENT, LIFE OF FIELD SUPPORT AND TOOLING PACKAGES.

Since 1985, Koso Kent Introl (KKI) has supplied almost 800 subsea choke valves to the industry from its UK facility in Brighouse.

As well as subsea choke and control valves for standard applications, our dedicated engineering team produces solutions for special and bespoke subsea project applications.

The product range brings together high technology proprietary equipment from reputable suppliers with over 30 years' experience in the subsea industry.

Recent qualification programmes have been executed to ensure the subsea product range is in accordance with current international standards, specifications and legislation.

All programmes have been fully surveyed by Lloyds Register EMEA.

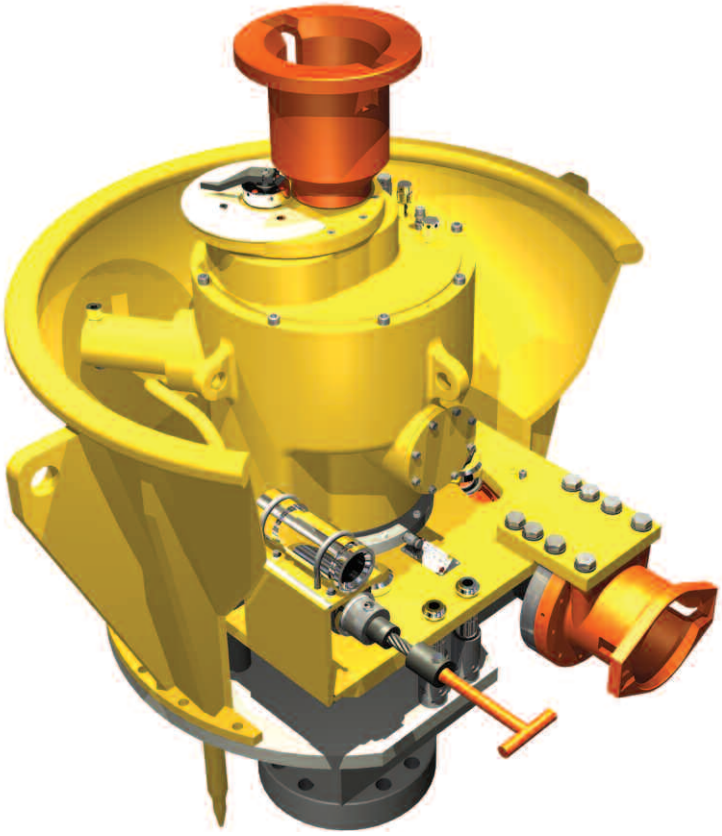

INTROSTEP WITH VERTICAL ORIENTATED MECHANICAL OVERRIDE

KOSO KENT INTROL SUBSEA CENTRE OF EXCELLENCE – BRIGHOUSE

QUALITY MANUFACTURING

Maintaining the highest standards of quality in design, production and customer service are fundamental aspects of the Koso Kent Introl philosophy.

Our facility is accredited in accordance with Quality Management System ISO 9001 and Environmental Management System ISO 14001. In addition all products, where applicable, conform to ATEX, PED and all other applicable EU Directives and are CE marked accordingly.

The company's standard manufacturing experience includes NACE MR01.75, NORSOK, API 6A specifications and individual customer specifications. Our in-house inspection and testing facilities include hardness testing, NDE, PMI, gas and flow testing.

Safety is paramount in everything we do, with all employees undergoing general and specific Health and Safety training.

KOSO KENT INTROL, BRIGHOUSE, UK

FPAL
empowered by Achilles

SERIES 75 SUBSEA CHOKES

NON-RETRIEVABLE CHOKES

The first subsea non-retrieve choke was supplied by KKI in 1985 and since then around 300 have been supplied by our Brighouse facility. Subsea non-retrievable chokes are a popular design choice when the system design dictates a choke shall be mounted in a separately retrievable module or the operator specifies a non-retrieve design. Common non-retrievable host structures consist of choke/flow modules or choke bridges.

Non-retrievable choke features:
- 2” to 8” size range
- Up to 15,000 psi rated designs
- -46°C to +121°C (classification L-U) as standard
- Up to material class HH
- Up to 1000 design CVs with linear or equal percent characteristic
- Single or multi-phase production, water or chemical Injection and artificial gas lift applications
- Stepping type and modulating hydraulic actuators
- Side or top mounted receptacles and visual indicators
- Linear or rotary variable displacement transducers for remote position indication, non-redundant, redundant electronics or full redundancy options.

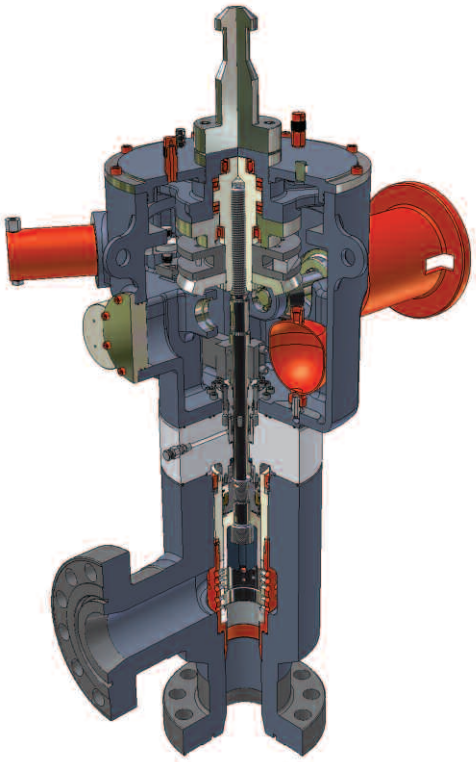

TYPICAL NON-RETRIEVABLE CHOKE

RETRIEVABLE CHOKES

The first subsea retrievable choke was supplied by KKI in 1991 and since then around 350 have been supplied by our Brighouse facility. The choke is normally considered a critical component in the system and in today’s subsea architecture it is commonplace that a separately retrievable choke insert is specified. The Koso Kent Introl design utilises a single bolt connector for ease of insert installation and removal and is modular in design, allowing either diver or ROV maintenance.

Retrievable choke features:
- 2” to 8” size range
- Up to 15,000 psi rated designs
- -46°C to +121°C (classification L-U) as standard
- Up to material class HH
- Up to 800 design CVs with linear or equal percent characteristic
- Single or multi-phase production, water or chemical Injection and artificial gas lift applications
- Stepping type and modulating hydraulic actuators
- Side or top mounted receptacles and visual indicators
- Linear or rotary variable displacement transducers for remote position indication, non-redundant, redundant electronics or full redundancy options
- Optional body/bonnet primary seal test via hot stab feature.

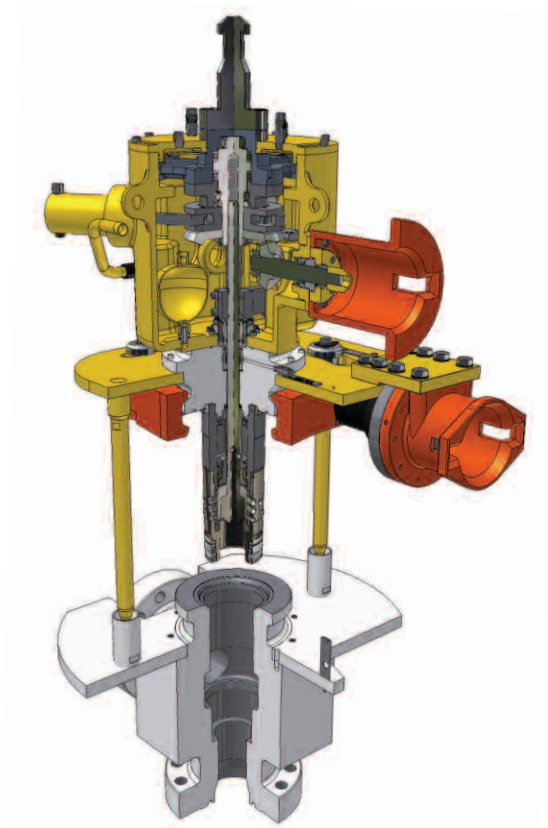

CHOKE INSERT WITH INTROSTEP ACTUATOR

CONTROL VALVES

Recent developments of subsea pumping and seafloor processing are generating a high technology requirement for subsea control valves. Koso Kent Introl can provide subsea control valves for various applications.

Subsea control valve features:
- 2” to 8” size range
- Non-retrieve or ROV/ROT retrievable options
- Fast acting, closed to open in ≤ 2 seconds
- Up to 15,000 psi rated design
- High CV values up to 1000
- Up to material class API 6A HH
- -46°C to +121°C (classification L-U) as standard.

SUBSEA ACTUATORS

STEPTROL AND INTROSTEP FEATURES

LINEAR THRUST
30,000 lbf

CHOKE TRAVEL AND STEP SUMMARY
1 ½" choke travel and 67 steps
2 ¼" choke travel and 100 steps
3 ½" choke travel and 156 steps

HYDRAULIC PRESSURE OPERATING RANGE
Designed for 3,000 & 5,000 psi LP control systems

HYDRAULIC FLUID COMPATIBILITY
Water based or mineral oil control fluid

HYDRAULIC CLEANLINESS
Typically SAE AS4059 class 6 B-F or better

MECHANICAL OVERRIDE – SIDE MOUNTED
1 ½" choke travel and 13 turns
2 ¼" choke travel and 20 turns
3 ½" choke travel and 31 turns
390 lbf/ft maximum operating torque
500 lbf/ft damage torque

MECHANICAL OVERRIDE – TOP MOUNTED
1 ½" choke travel and 6 turns
2 ¼" choke travel and 9 turns
3 ½" choke travel and 14 turns
510 lbf/ft maximum operating torque
600 lbf/ft damage torque

LOCAL POSITION INDICATOR
Graduated percentage scale as standard.
Bio-fouling resistant material.

REMOTE POSITION INDICATOR
Resolution typically better than 0.5% of actuator travel, dual redundancy options available.

POSITION ACCURACY
Better than 2% of actuator travel.

REPEATABILITY
Better than 1% of actuator travel.

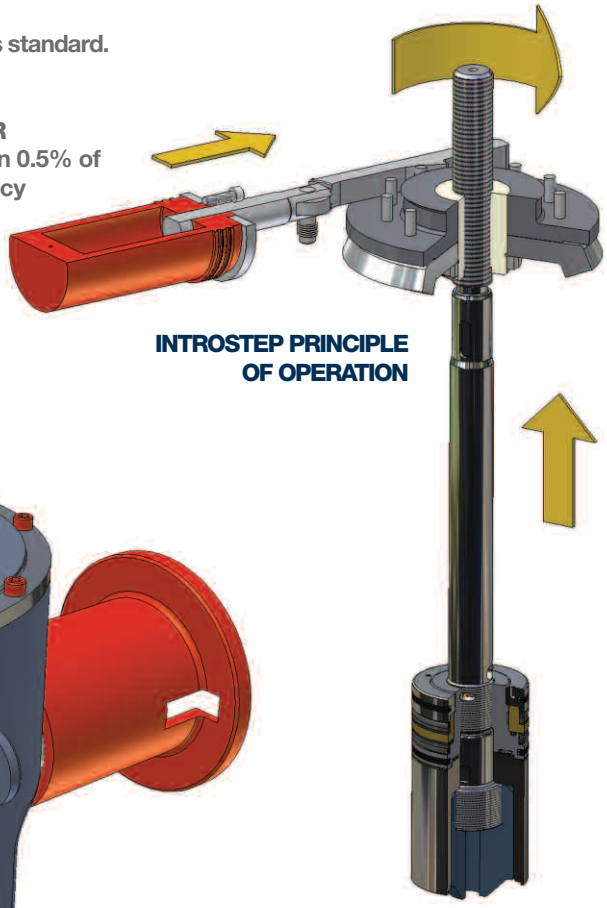

INTROSTEP PRINCIPLE OF OPERATION

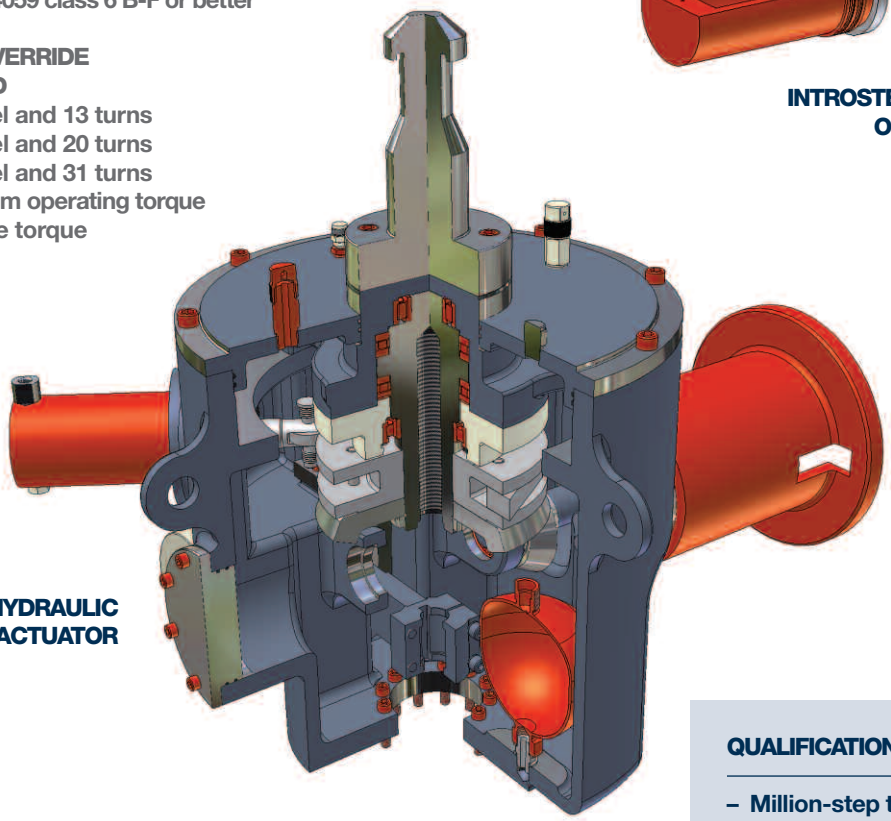

INTROSTEP HYDRAULIC STEPPING ACTUATOR

NEW ACTUATOR TEST FACILITY

- New test hydraulic power unit (THPU)
- Hydraulic system controlled by PLC with data capture for download to quality control department
- Designed for FAT, performance and million-step testing programmes
- 0-5000 psi w.p, stepping and fast close features – fully programmable
- Installed and commissioned in May 2010.

QUALIFICATION SUMMARY

- Million-step test at 3,000 and 5,000 psi LP system pressures with variable choke load conditions
- Hyperbaric testing to 240 bar equalling typical depth of 2300 metres (designed for 3000 metres).

SUBSEA PRODUCT RANGE

Koso Kent Introl choke and control valves offer a high reliability solution and proven design to the subsea market. The flexibility of this design facilitates many different trim and body material options.

CARTRIDGE TRIM DESIGN WHICH INCORPORATES A METALLIC 'BRICK STOPPER'

Koso Kent Introl's subsea product range covers a wide range of applications including single or multi-phase production, water/chemical/gas injection, artificial gas lift, anti-surge or closed loop flow control. When the required subsea well chemical injection flow rates are greater than the capacity of traditional CIMV's, subsea chokes are an ideal alternative. All chokes and control valves can be provided as non-retrievable or insert retrievable designs.

The product range is also complemented by a full suite of onshore and offshore handling, test and intervention equipment which can packaged to meet project requirements and which can be provided on a rental or purchase basis.

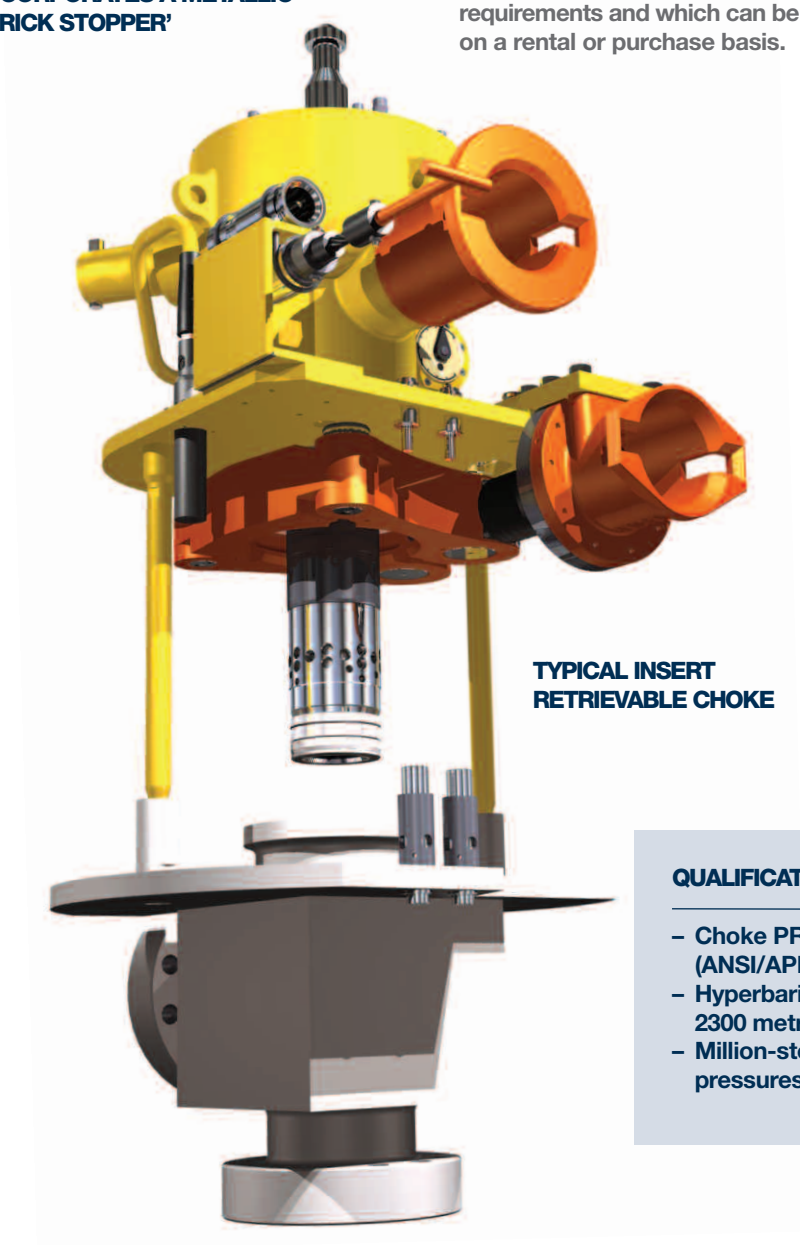

TYPICAL INSERT RETRIEVABLE CHOKE

PRODUCT RANGE SUMMARY

- Non-retrievable, diver assist or diverless equipment options
- 25 years design life as standard
- 2" to 8" size range
- Up to 15,000 psi rated designs
- Up to 1000 design CVs with linear or equal percent characteristic
- Non-collapsible trim design
- Multi-stage velocity control trim designs
- Single or multi-phase production, water or chemical injection and artificial gas lift applications
- Control valve flow control and anti-surge applications
- Stepping type and modulating hydraulic actuators
- Side or top mounted ROV receptacles
- Side or top mounted visual position indication
- Linear or rotary variable displacement transducers for remote position indication
- Optional body/bonnet primary seal test via hotstab feature
- Choke insert running tools
- Handling and work-over equipment
- Offshore deck testing systems.

SUBSEA CHOKES ON HYPERBARIC CHAMBER LOADING BED

QUALIFICATION TESTING SUMMARY

- Choke PR2 test in accordance with ISO 10423:2002 (ANSI/API 6A) section F
- Hyperbaric test of choke in accordance with API17D to 2300 metres water depth (designed for 3000 metres)
- Million-step test at 3,000 and 5,000 psi LP system pressures with variable choke load conditions

KOSO KENT INTROL LIMITED
ARMYTAGE ROAD
BRIGHOUSE
WEST YORKSHIRE
HD6 1QF
UK

TELEPHONE
+44 (0)1484 710311

FACSIMILE
+44 (0)1484 407407

EMAIL
info@kentintrol.com

WEBSITE
WWW.KENTINTROL.COM

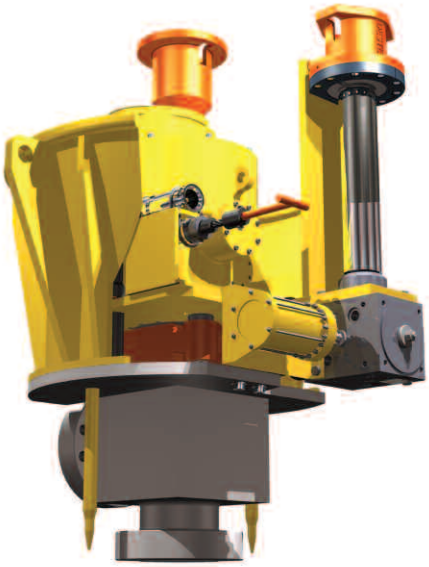

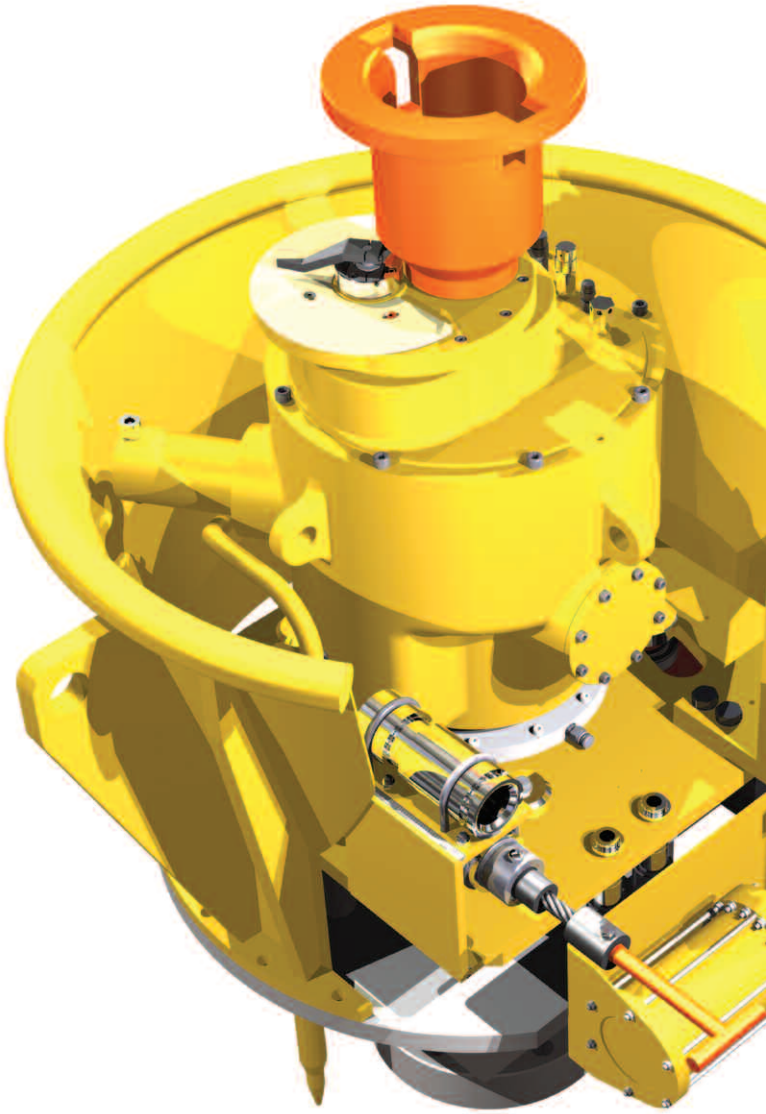

KOSO

Koso Kent Introl Limited is part of the KOSO Group of companies.

The Company's policy is one of continuous development and the right is reserved to modify the specifications contained herein without notice.

Copyright © September 2010
All rights reserved Koso Kent Introl Limited